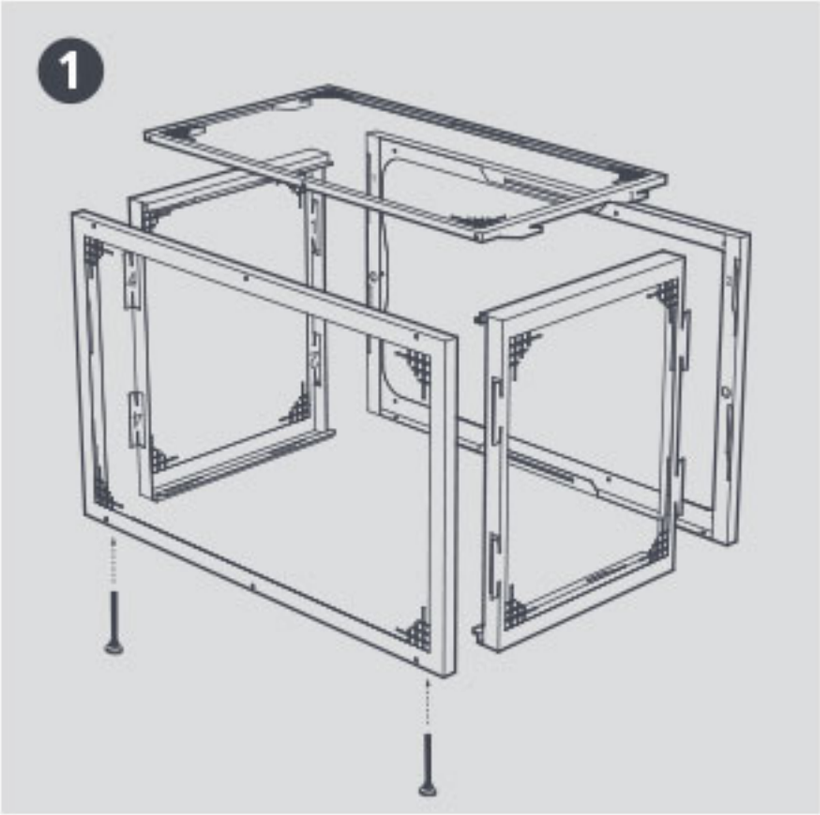
1

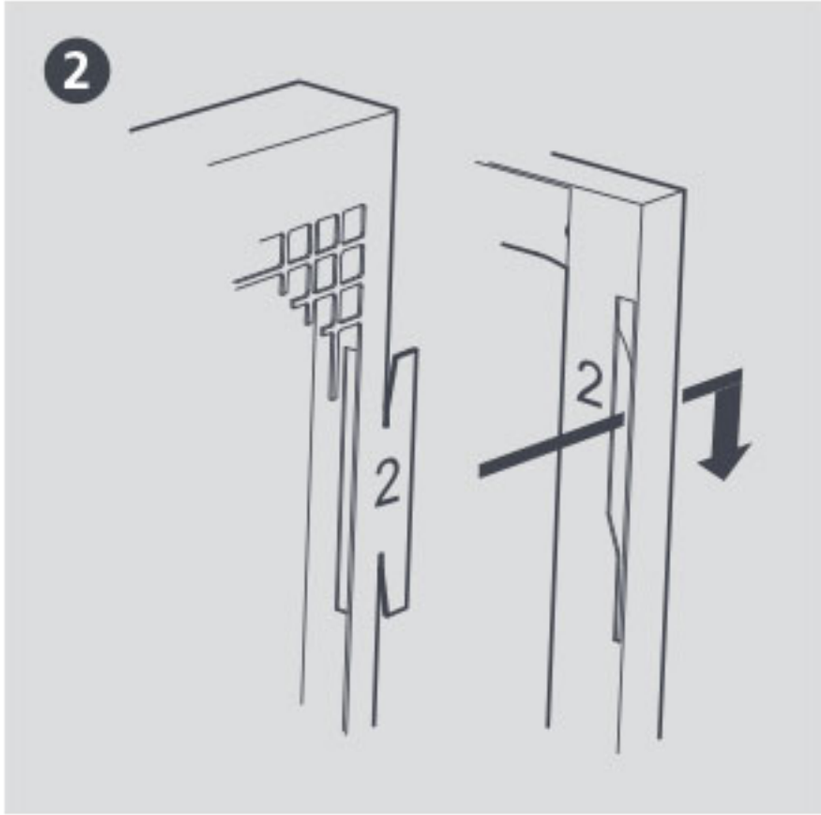
2
2
2

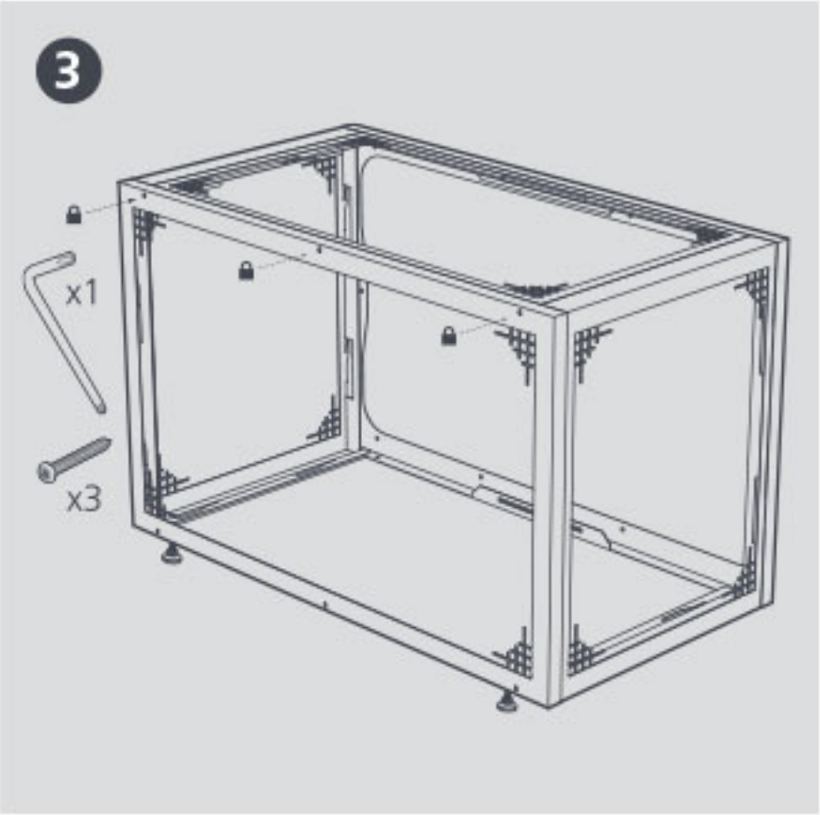
3
x1
x3